联动属具

Tipping Carriage Usre's Manual

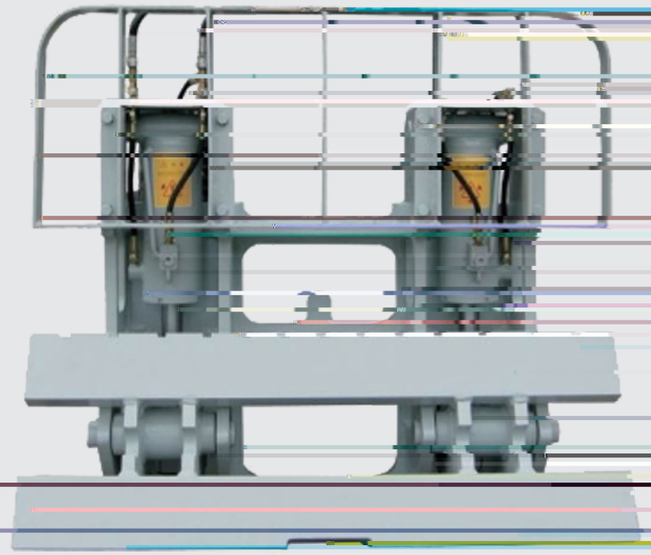

Addr:NO.18,Fangxing Road,High-tech District,Anqing,
Development Zone,Anhui Province,China
TEL:0556-5345329,5345352
Post cold:246001
E-mail:xsds@163.com

ANQING LIANDONG ENGINEERING TRUCKS ATTACHMENTS CO.,LTD

P

D

I

ORIGY W
ORIGY W W W €

G

D